Centre Number	Candidate Number	Name

UNIVERSITY OF CAMBRIDGE INTERNATIONAL EXAMINATIONS
General Certificate of Education Advanced Level

PHYSICS **9702/06**

Paper 6

October/November 2004

45 minutes

Candidates answer on the Question Paper.
No Additional Materials are required.

READ THESE INSTRUCTIONS FIRST

Write your Centre number, candidate number and name on all the work you hand in.
Write in dark blue or black pen in the spaces provided on the Question Paper.
You may use a soft pencil for any diagrams, graphs or rough working.
Do not use staples, paper clips, highlighters, glue or correction fluid.

Answer **all** of the questions in any **two** options.
The number of marks is given in brackets [ ] at the end of each question or part question.
You may lose marks if you do not show your working or if you do not use appropriate units.

If you have been given a label, look at the details. If any details are incorrect or missing, please fill in your correct details in the space given at the top of this page.

Stick your personal label here, if provided.

For Examiner's Use	
A	
F	
M	
P	
T	
Total	

This document consists of **23** printed pages and **1** blank page.

SP (SM/JG) S65136/3
© UCLES 2004

UNIVERSITY of CAMBRIDGE
International Examinations

[Turn over

Data

speed of light in free space,	$c = 3.00 \times 10^{8}\ \text{m s}^{-1}$
permeability of free space,	$\mu_0 = 4\pi \times 10^{-7}\ \text{H m}^{-1}$
permittivity of free space,	$\epsilon_0 = 8.85 \times 10^{-12}\ \text{F m}^{-1}$
elementary charge,	$e = 1.60 \times 10^{-19}\ \text{C}$
the Planck constant,	$h = 6.63 \times 10^{-34}\ \text{J s}$
unified atomic mass constant,	$u = 1.66 \times 10^{-27}\ \text{kg}$
rest mass of electron,	$m_e = 9.11 \times 10^{-31}\ \text{kg}$
rest mass of proton,	$m_p = 1.67 \times 10^{-27}\ \text{kg}$
molar gas constant,	$R = 8.31\ \text{J K}^{-1}\ \text{mol}^{-1}$
the Avogadro constant,	$N_A = 6.02 \times 10^{23}\ \text{mol}^{-1}$
the Boltzmann constant,	$k = 1.38 \times 10^{-23}\ \text{J K}^{-1}$
gravitational constant,	$G = 6.67 \times 10^{-11}\ \text{N m}^2\ \text{kg}^{-2}$
acceleration of free fall,	$g = 9.81\ \text{m s}^{-2}$

© UCLES 2004

Formulae

uniformly accelerated motion, $s = ut + \frac{1}{2}at^2$
$v^2 = u^2 + 2as$

work done on/by a gas, $W = p\Delta V$

gravitational potential, $\phi = -\frac{Gm}{r}$

simple harmonic motion, $a = -\omega^2 x$

velocity of particle in s.h.m., $v = v_0 \cos \omega t$
$v = \pm \omega \sqrt{(x_0^2 - x^2)}$

resistors in series, $R = R_1 + R_2 + \ldots$

resistors in parallel, $1/R = 1/R_1 + 1/R_2 + \ldots$

electric potential, $V = \frac{Q}{4\pi\epsilon_0 r}$

capacitors in series, $1/C = 1/C_1 + 1/C_2 + \ldots$

capacitors in parallel, $C = C_1 + C_2 + \ldots$

energy of charged capacitor, $W = \frac{1}{2}QV$

alternating current/voltage, $x = x_0 \sin \omega t$

hydrostatic pressure, $p = \rho g h$

pressure of an ideal gas, $p = \frac{1}{3}\frac{Nm}{V}\langle c^2 \rangle$

radioactive decay, $x = x_0 \exp(-\lambda t)$

decay constant, $\lambda = \frac{0.693}{t_{\frac{1}{2}}}$

critical density of matter in the Universe, $\rho_0 = \frac{3H_0^2}{8\pi G}$

equation of continuity, $Av = \text{constant}$

Bernoulli equation (simplified), $p_1 + \frac{1}{2}\rho v_1^2 = p_2 + \frac{1}{2}\rho v_2^2$

Stokes' law, $F = Ar\eta v$

Reynolds' number, $R_e = \frac{\rho v r}{\eta}$

drag force in turbulent flow, $F = Br^2\rho v^2$

© UCLES 2004

[Turn over

Answer **all** of the questions in any **two** Options.

The Options are as follows:

Option A	Astrophysics and Cosmology	questions 1, 2 and 3
Option F	The Physics of Fluids	questions 4, 5 and 6
Option M	Medical Physics	questions 7, 8 and 9
Option P	Environmental Physics	questions 10, 11 and 12
Option T	Telecommunications	questions 13, 14 and 15

Option A

Astrophysics and Cosmology

1 Fig. 1.1 lists some distances and some diameters of various objects in the Universe.

distance or diameter	
4.6 light-seconds	.....
16 light-minutes	diameter of Earth's orbit round the Sun
4.2 light-years	.....
1.2×10^5 light-years	.....
3×10^{11} light-years	.....

Fig. 1.1

Complete Fig. 1.1 by naming each distance or diameter. [4]

© UCLES 2004

2 The Hubble space telescope has provided a means by which very distant galaxies have been discovered.

State and explain two reasons why a similar telescope on the Earth's surface would not enable these discoveries to be made.

1. .....

.....

.....

2. .....

.....

.....[4]

© UCLES 2004

For Examiner's Use

3 **(a)** The mean critical density ρ_0 of matter in the Universe is related to the Hubble constant H_0 and the gravitational constant G by the expression

$$\rho_0 = \frac{3H_0^2}{8\pi G}.$$

(i) Explain the significance of the mean critical density ρ_0 for the evolution of the Universe.

.....

.....

.....[2]

(ii) Without carrying out any mathematical derivation, explain why the gravitational constant G is a factor in this expression.

.....

.....

.....[2]

(b) Fig. 3.1 shows the variation with distance d of the recessional speed v of some galaxies.

Note that the graph is a lg-lg plot.

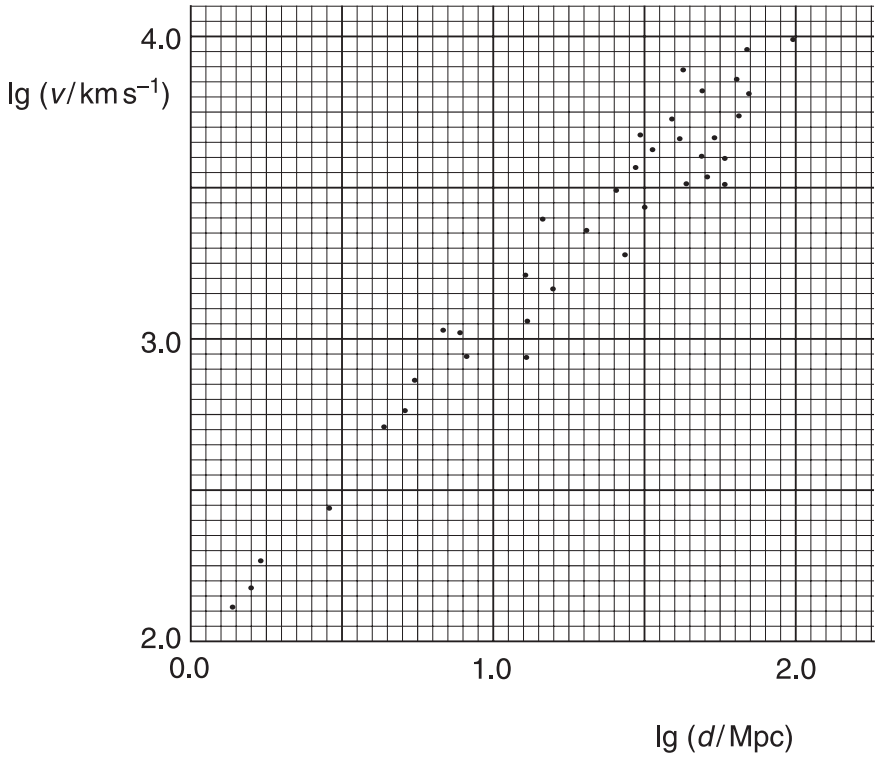

Fig. 3.1

© UCLES 2004

(i) Use Fig. 3.1 to determine an approximate value for

1. the age of the Universe,

age = ... s [4]

2. the mean critical density of matter in the Universe.

critical density = ... kg m^{-3} [2]

(ii) Determine the number of nucleons per cubic metre that is equivalent to your answer in **(i)2**.

number = ...[2]

© UCLES 2004

Option F

The Physics of Fluids

4 The densities of liquids may be measured using hydrometers.
The hydrometer in Fig. 4.1 consists of a weighted bulb with a thin stem.

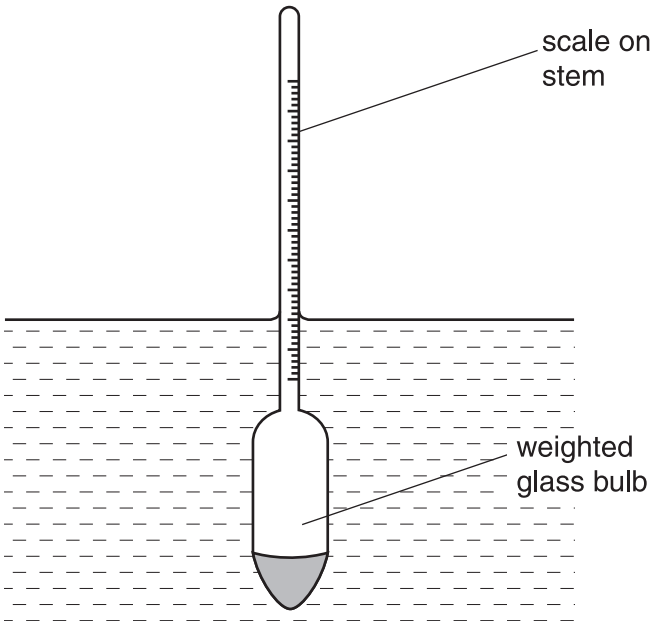

Fig. 4.1

The hydrometer is floated in the liquid and the density is read from a scale on its stem.

The hydrometer in Fig. 4.1 is designed to measure densities between 1.00 g cm^{-3} and 1.10 g cm^{-3}.

(a) On Fig. 4.1, mark with the letter M the position on the scale of the 1.10 g cm^{-3} graduation. [1]

(b) The hydrometer has a mass of 165 g and the stem has a uniform cross-sectional area of 0.750 cm^2.

Calculate

(i) the change in the submerged volume of the hydrometer when it is first placed in a liquid of density 1.00 g cm^{-3} and then in a liquid of density 1.10 g cm^{-3},

change = ... cm^3 [4]

© UCLES 2004

(ii) the distance on the stem between the 1.00 g cm^{-3} and the 1.10 g cm^{-3} graduations.

distance = ... cm [1]

© UCLES 2004

[Turn over

For Examiner's Use

5 **(a)** A viscous liquid undergoes laminar flow in a tube. On Fig. 5.1, complete the velocity vectors to represent the flow of liquid along the tube. [2]

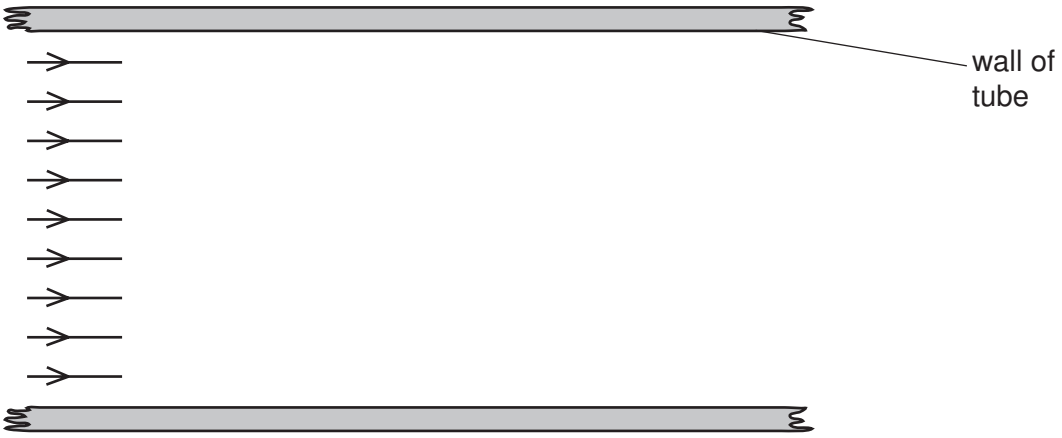

Fig. 5.1

(b) The volume V of liquid flowing in a streamline manner per unit time along a pipe of length L and radius r is given by the expression

$$V = \frac{\pi r^4}{8L\eta} \times \Delta p,$$

where Δp is the pressure difference between the ends of the pipe and η is the viscosity of the liquid.

(i) Suggest why the flow of liquid is measured as a volume flow rate, rather than as a linear speed of the liquid.

.....

.....[1]

(ii) Determine quantitatively the effect on the volume flow rate of the liquid along the pipe when

1. the pressure difference Δp is doubled,

volume flow rate is .....

© UCLES 2004

2. the pressure difference Δp is doubled and the pipe stretches so that its radius r increases by 5.0%.

volume flow rate is .....

[3]

© UCLES 2004

[Turn over

6 **(a)** Describe what is meant by *turbulence*.

.....

.....

.....

.....[3]

(b) A car is moving through air. The drag force F_D on the car is measured at two speeds v. The readings are shown in Fig. 6.1.

v / m s^{-1}	F_D / N
30	540
40	970

Fig. 6.1

(i) State and explain whether these data suggest the flow of air round the car is laminar or turbulent.

[3]

(ii) The drag force on the car at maximum speed is 2.0×10^3 N. Calculate the maximum speed of the car.

maximum speed = ... m s^{-1} [2]

© UCLES 2004

For Examiner's Use

Option M

Medical Physics

7 **(a)** Explain briefly the **use** of ultrasound to obtain diagnostic information about internal body structures.

.....

.....

.....

.....

.....

.....

.....[5]

(b) The variation of the intensity I of a parallel beam of ultrasound with the thickness x (measured in metres) of a muscle is given by the expression

$$I = I_0 \, e^{-23x},$$

where I_0 is the initial intensity.

Calculate the fractional intensity $\frac{I}{I_0}$ transmitted through a muscle of thickness 5.5 cm.

$\frac{I}{I_0}$ = ...[2]

(c) Having travelled through muscle 5.5 cm thick, the beam is reflected from a muscle/bone boundary. At this boundary, 35% of the incident intensity is reflected.

Calculate the fractional intensity $\frac{I}{I_0}$ that is received back at the transmitter.

$\frac{I}{I_0}$ = ...[2]

© UCLES 2004

[Turn over

8 Fig. 8.1 illustrates an eye forming a focussed image of an object O on the retina.

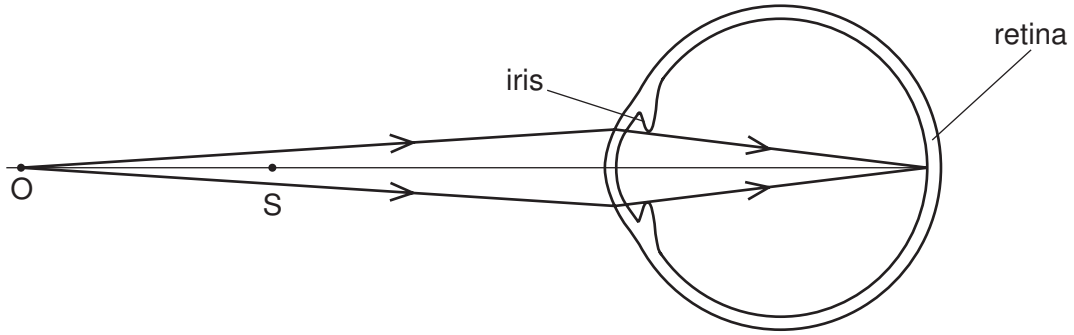

Fig. 8.1

It is assumed that all refraction occurs at the surface of the cornea.

Whilst viewing the object O, a second object S also *appears* to be in focus.

(a) (i) On Fig. 8.1, draw rays to show the formation of the image of object S.

(ii) Hence explain what is meant by *depth of focus*.

.....

.....

.....

[3]

(b) Fig. 8.2 shows the same eye viewing the same object O, but in bright sunlight so that the diameter of the iris is reduced.

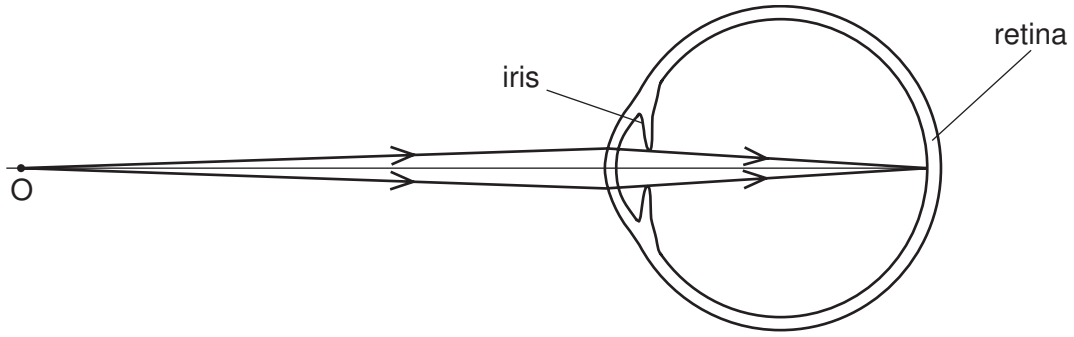

Fig. 8.2

State and explain the effect of this change in the level of illumination on the depth of focus. You may draw on Fig. 8.2 if you wish.

.....

.....

.....

.....[3]

© UCLES 2004

9 A person listens to music using personal headphones.

The sound power incident on one eardrum of area 65 mm^2 is 0.33 μW.

(a) Determine the intensity level *I.L.* of the sound at the eardrum.

I.L. = ... dB [4]

(b) Suggest the effect on hearing ability of exposure to the intensity level calculated in **(a)**.

.....

.....[1]

© UCLES 2004

For Examiner's Use

Option P

Environmental Physics

10 (a) Briefly describe the process of nuclear fission.

.....

.....

.....

.....[3]

(b) Distinguish between the functions of the moderator and the control rods in a nuclear reactor.

moderator: .....

.....

.....

control rods: .....

.....

.....[4]

© UCLES 2004

11 (a) A water wave may be approximated to a square wave, as illustrated in Fig. 11.1.

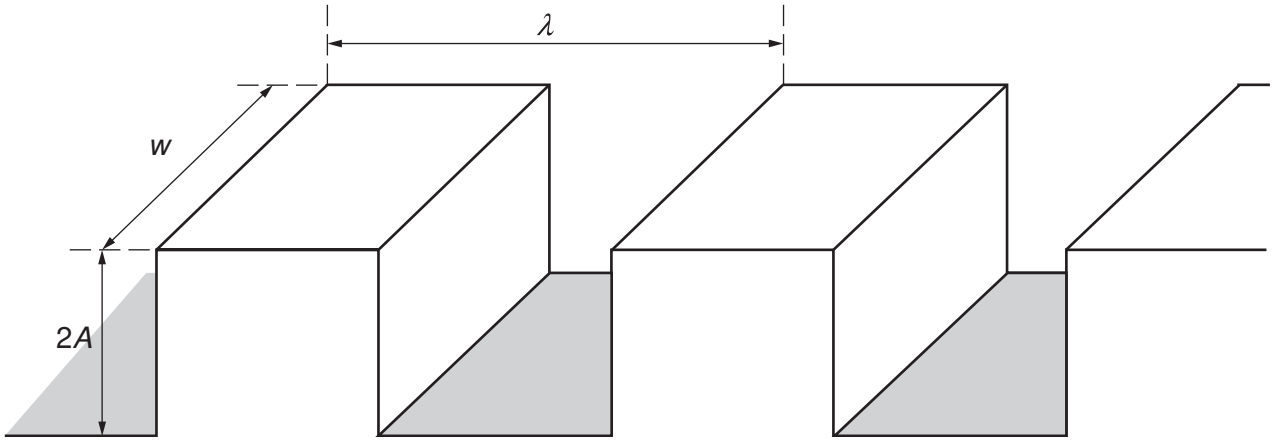

Fig. 11.1

Such a wave has wavelength λ, amplitude A and speed V. The width of the wave is w.

(i) Show that the increase in gravitational potential energy of the water to form one wave crest is

$$\tfrac{1}{2}wA^2\lambda\rho g,$$

where ρ is the density of water and g is the acceleration of free fall.

[3]

(ii) Hence, by considering the number of wave crests passing a point per unit time, show that the power P of the wave is given by

$$P = \tfrac{1}{2}wA^2\rho g V.$$

[2]

(b) Suggest one environmental problem associated with the harnessing of wave power.

.....

.....[1]

© UCLES 2004

12 (a) A room in a house is to be maintained at a temperature of 25 °C when the outside temperature is 5 °C.

Fig. 12.1 shows the various components contributing to the rate of loss L of thermal energy from the room.

	L / W
walls	210
floor	110
windows	420
ceiling	400

Fig. 12.1

Draw a Sankey diagram for the movement of thermal energy in and out of the room.

[3]

(b) Two kettles each contain the same mass of water at room temperature.
One is a plastic electric kettle with an internal heating element.
The other is a steel kettle on a gas ring.
Discuss the efficiency of the two kettles as the water is brought to 100 °C.

.....

.....

.....

.....

.....[4]

© UCLES 2004

For Examiner's Use

Option T

Telecommunications

13 Fig. 13.1 illustrates part of the electromagnetic spectrum that is used for radio communication.

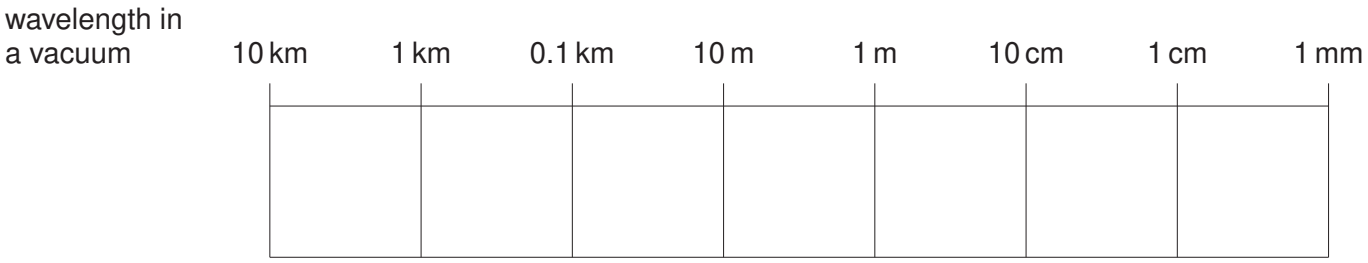

Fig. 13.1

On Fig. 13.1, identify the region of the spectrum that is used for

(a) television broadcasts (label this region T), [1]

(b) satellite communication (label this region S). [1]

© UCLES 2004

[Turn over

14 **(a)** Explain what is meant by *frequency modulation* (FM).

.....

.....

.....

.....

.....[4]

(b) The variation with time t of the signal voltage V transmitted by an aerial is shown in Fig. 14.1. (Fig. 14.1 is on the opposite page.)

Use Fig. 14.1 to determine the frequency of

(i) the unmodulated carrier wave,

frequency = ... Hz

(ii) the information signal.

frequency = ... Hz
[3]

(c) A second system of modulation is amplitude modulation (AM).

State one advantage and one disadvantage of FM when compared with AM for nationwide broadcasting.

advantage: .....

.....

disadvantage: .....

.....[2]

© UCLES 2004

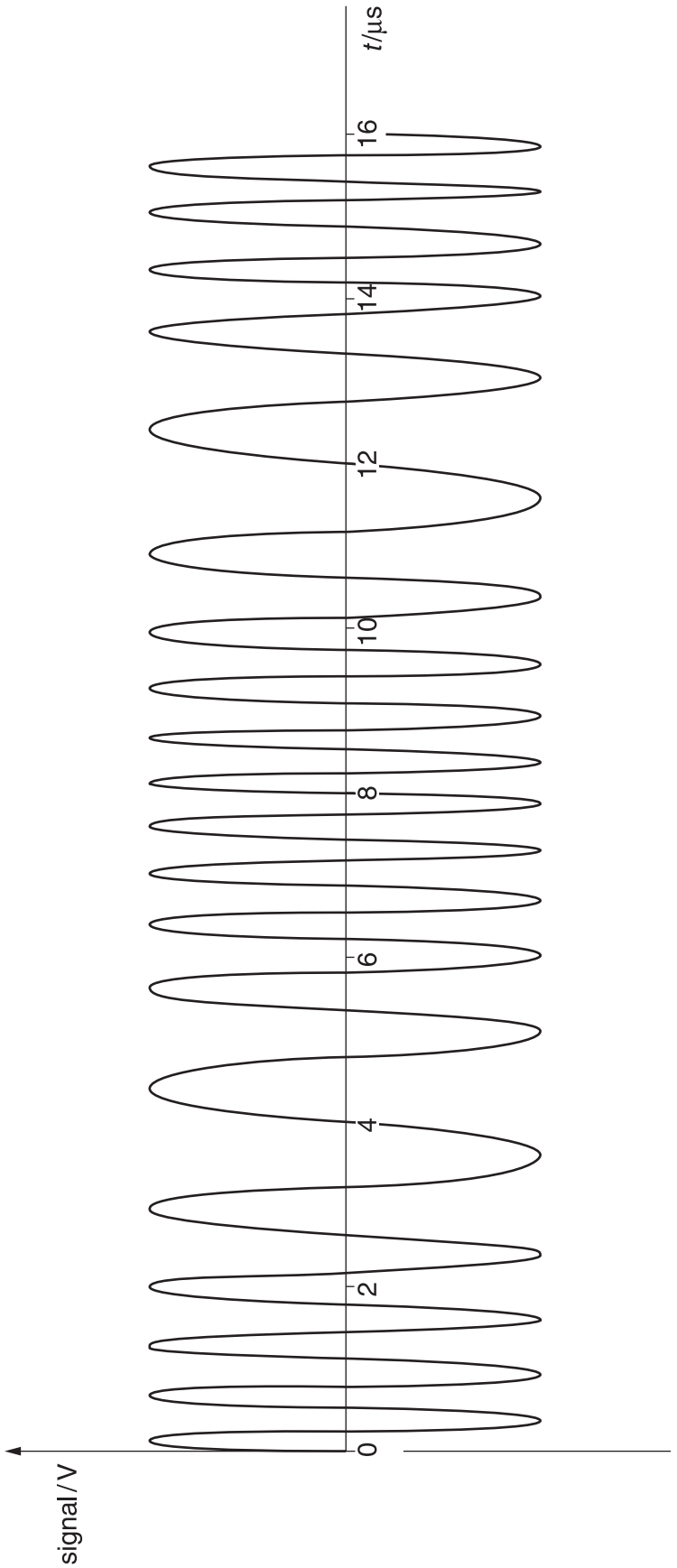

Fig. 14.1

15 The variation with time *t* of an audio signal is shown in Fig. 15.1.

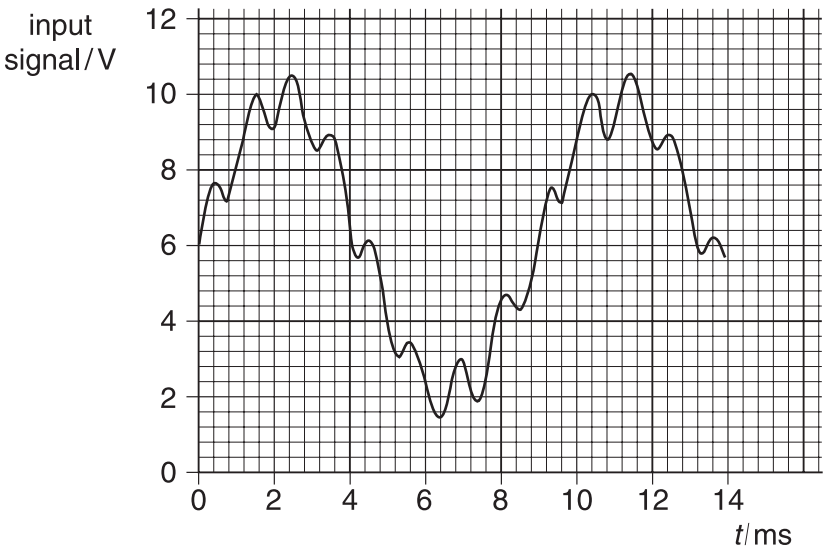

Fig. 15.1

The signal is processed in an analogue-to-digital converter (ADC) before transmission. At the receiver, the signal is processed in a digital-to-analogue converter (DAC). The variation with time *t* of the received signal, after processing, is shown in Fig. 15.2.

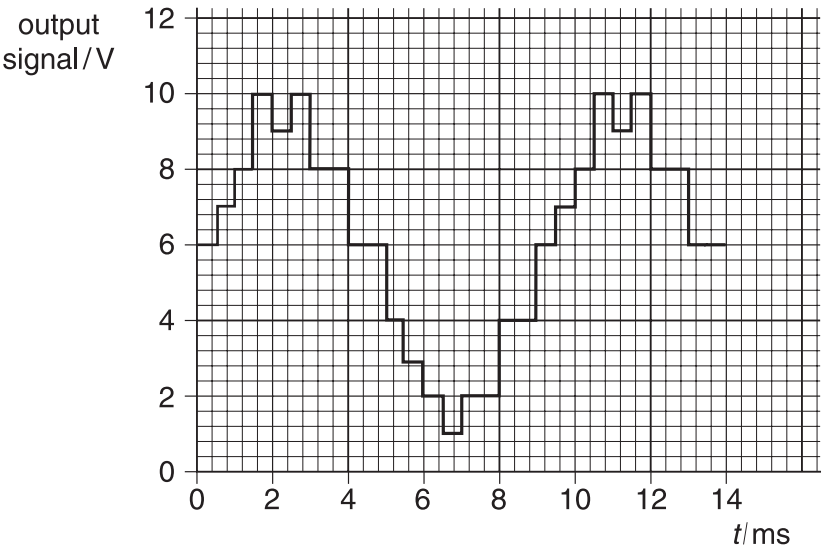

Fig. 15.2

© UCLES 2004

The ADC and the DAC have the same number of bits.

(a) Determine, for this transmission,

(i) the sampling frequency,

frequency = ... Hz

(ii) the interval between the voltage levels used in sampling,

interval between voltage levels = ... V

(iii) the number of bits needed to transmit each sample voltage.

number of bits = ...
[4]

(b) The waveform of Fig. 15.2 is not a faithful reproduction of that of Fig. 15.1.

Suggest and explain minimum values for the sampling frequency and the number of voltage levels of the ADC that are necessary to recover all the main features of the waveform in Fig. 15.1.

sampling frequency: .....

.....

.....

number of voltage levels: .....

.....

.....

.....[5]

© UCLES 2004

BLANK PAGE

Every reasonable effort has been made to trace all copyright holders where the publishers (i.e. UCLES) are aware that third-party material has been reproduced. The publishers would be pleased to hear from anyone whose rights they have unwittingly infringed.

University of Cambridge International Examinations is part of the University of Cambridge Local Examinations Syndicate (UCLES), which is itself a department of the University of Cambridge.